1

NOT USED

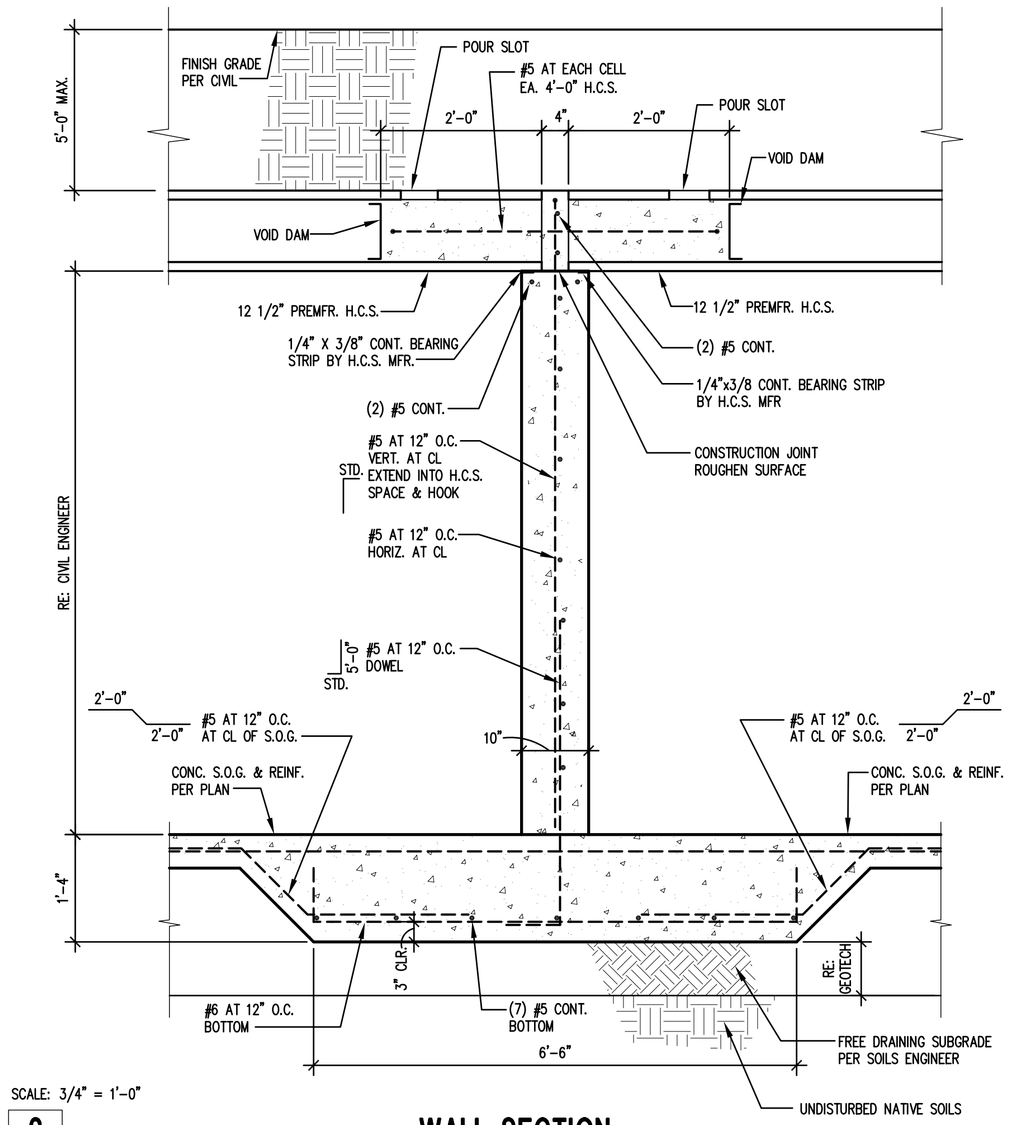

SCALE: 3/4" = 1'-0"

2 WALL SECTION

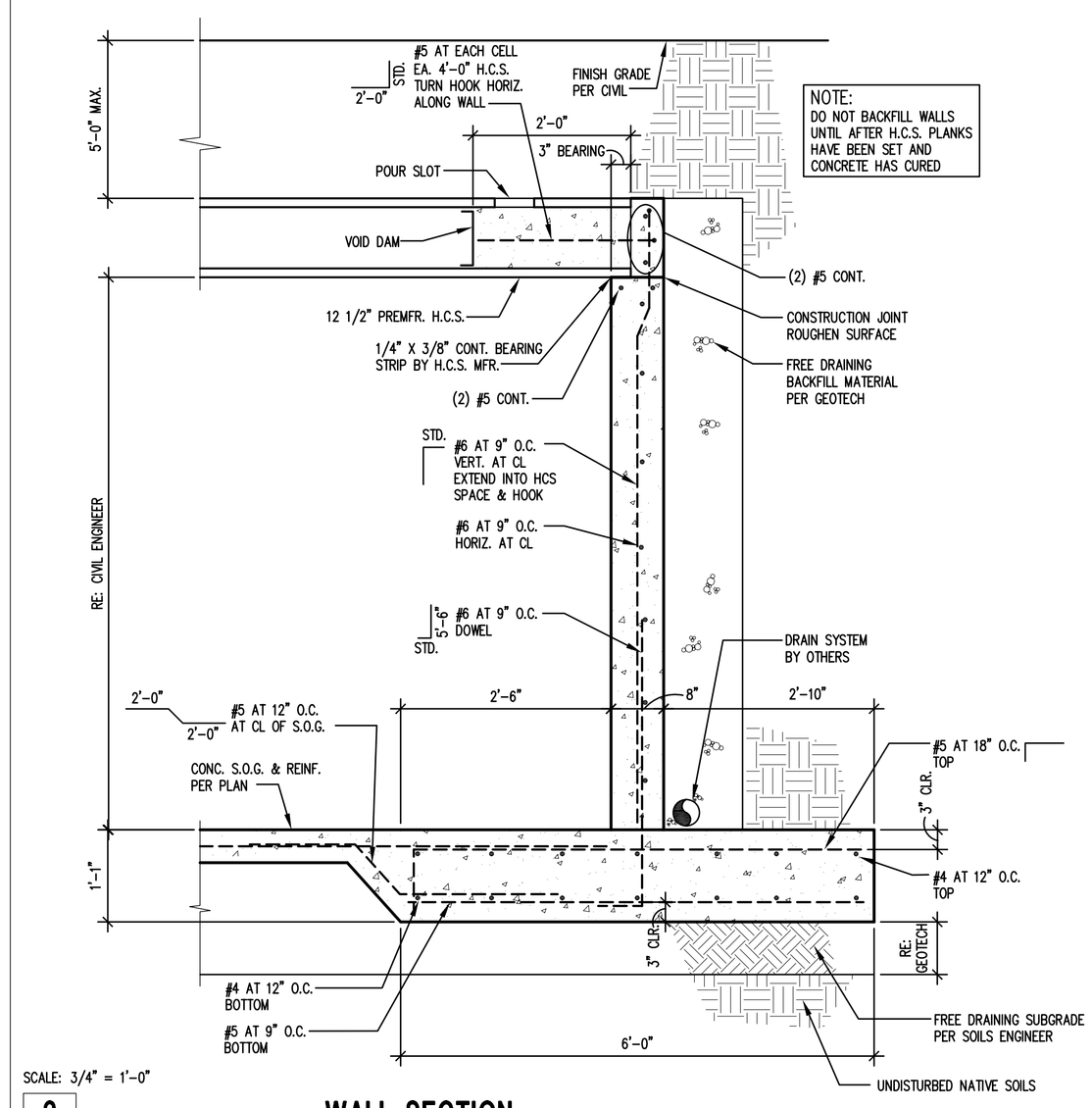

SCALE: 3/4" = 1'-0"

3 WALL SECTION

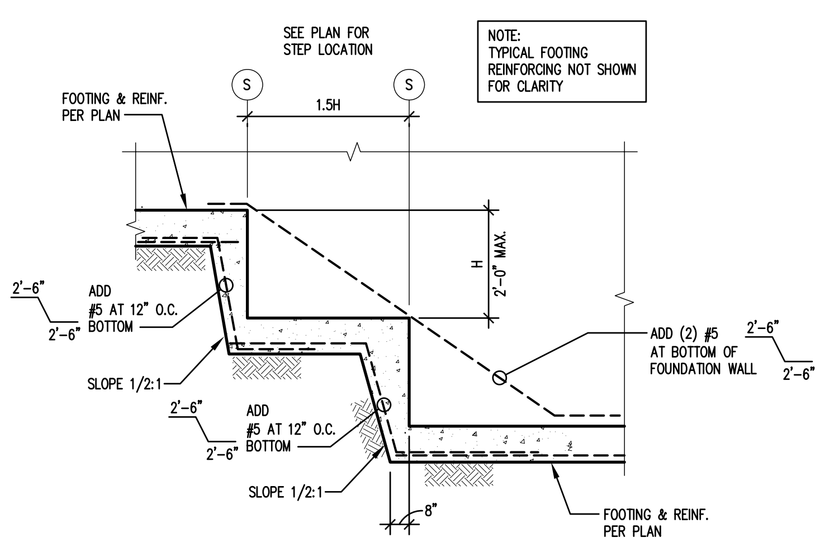

SCALE: NONE

4 TYPICAL STEPPED FOOTING

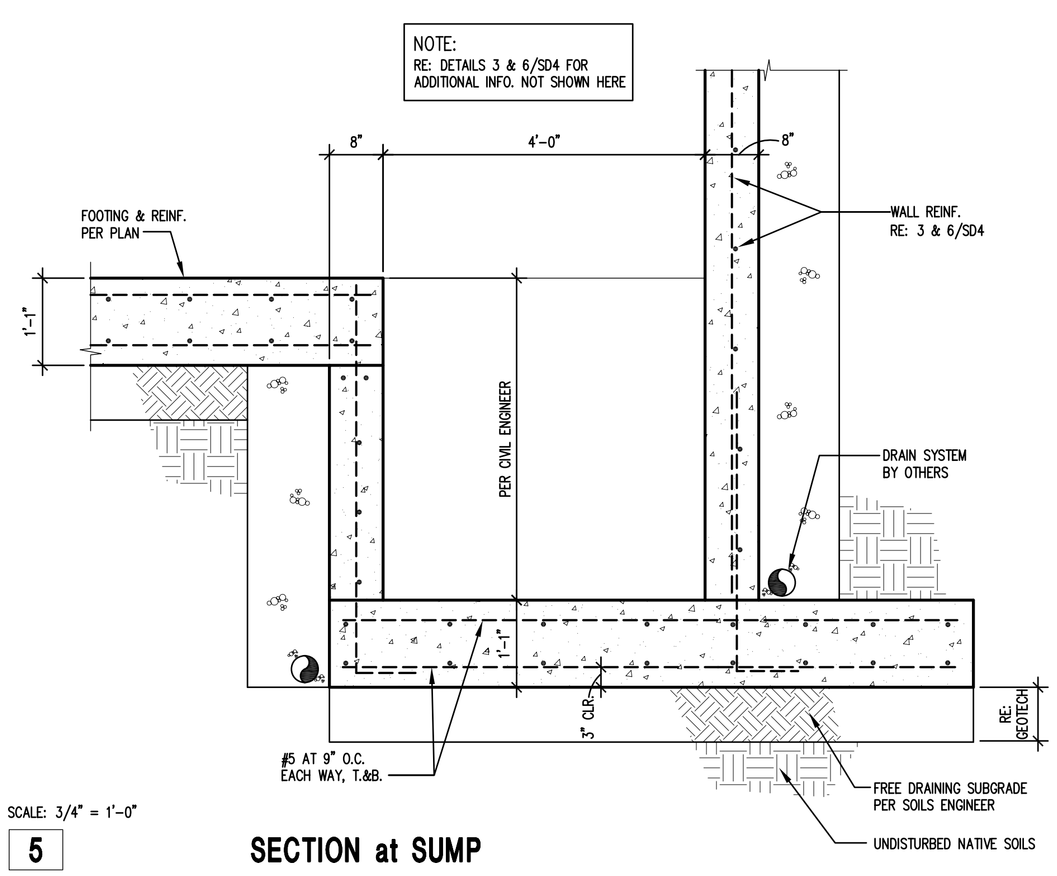

SCALE: 3/4" = 1'-0"

5 SECTION at SUMP

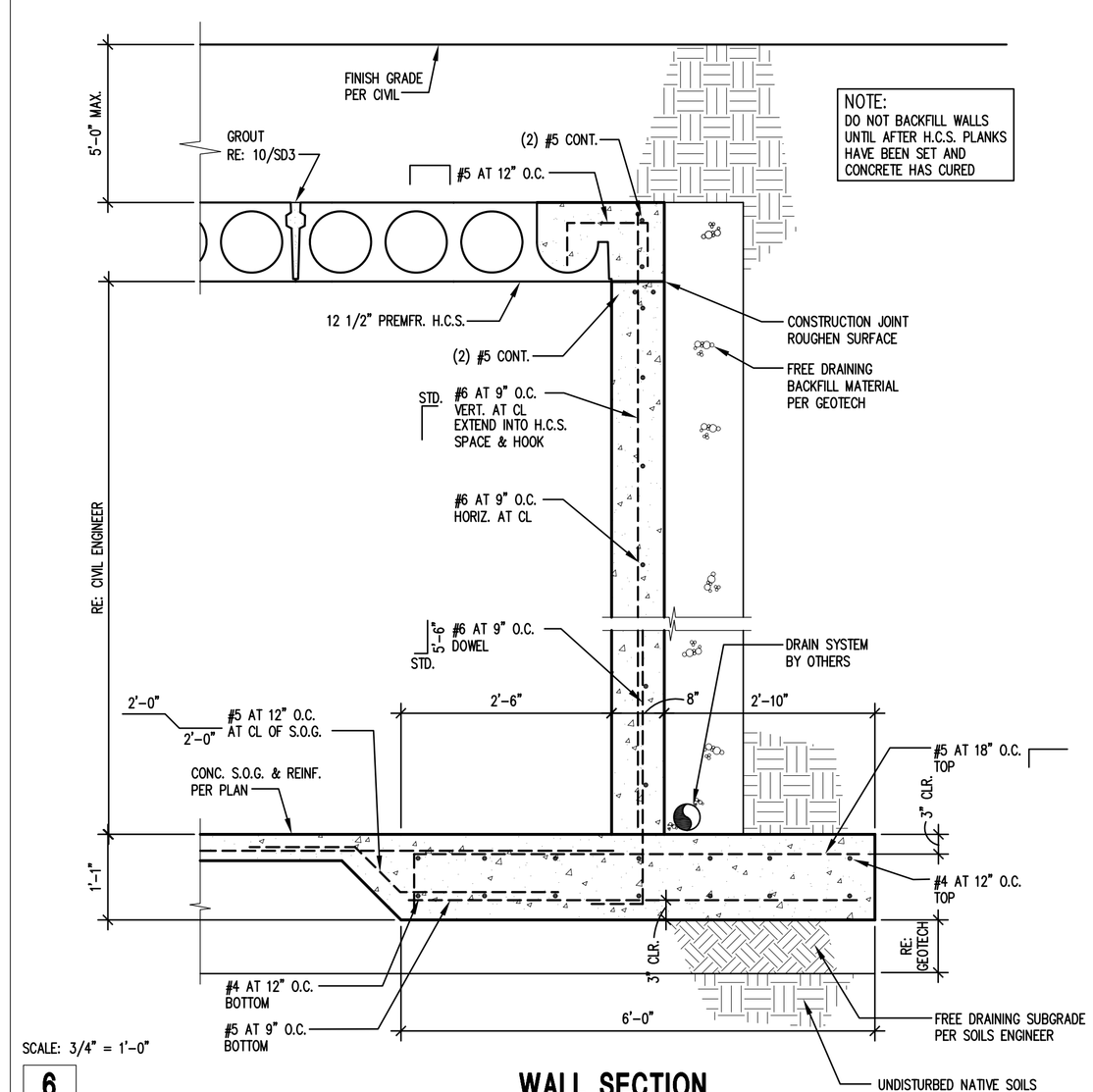

SCALE: 3/4" = 1'-0"

6 WALL SECTION

CT ENGINEERING INC.
Structural Engineers
180 Nickerson Street Suite 302 Seattle, WA 98109
206.285.4512 (V) 206.285.0618 (F)

NO.	REVISION	DATE
	PERMIT SUBMITTAL	02/12/10

ENGR: JWH | CAD: DWH | PLOT: 02/12/10 | FILE: 09106SD3 | JOB #: 09106

Wall Sections

Griffith Detention Vault
1405 148th Avenue NE
Bellevue, Washington

SD4